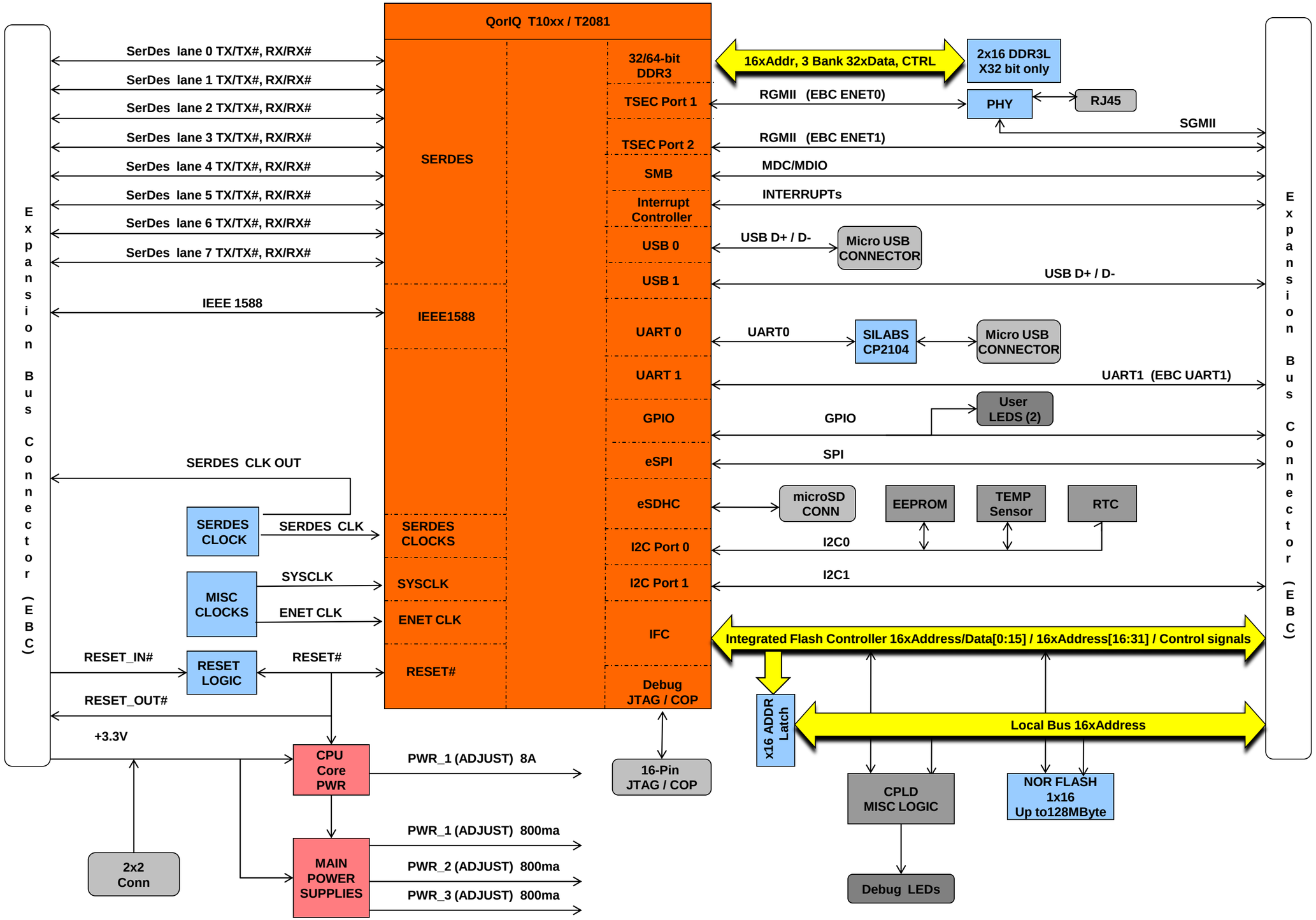
QorIQ T10xx / T2081
Expansion Bus Connector (EBC)
SerDes lane 0 TX/TX#, RX/RX#
SerDes lane 1 TX/TX#, RX/RX#
SerDes lane 2 TX/TX#, RX/RX#
SerDes lane 3 TX/TX#, RX/RX#
SerDes lane 4 TX/TX#, RX/RX#
SerDes lane 5 TX/TX#, RX/RX#
SerDes lane 6 TX/TX#, RX/RX#
SerDes lane 7 TX/TX#, RX/RX#
SERDES
IEEE 1588
IEEE1588
SERDES CLK OUT
SERDES CLOCK
SERDES CLK
SERDES CLOCKS
SYSCLK
MISC CLOCKS
SYSCLK
ENET CLK
ENET CLK
RESET_IN#
RESET LOGIC
RESET#
RESET#
RESET_OUT#
+3.3V
CPU Core PWR
PWR_1 (ADJUST) 8A
MAIN POWER SUPPLIES
PWR_1 (ADJUST) 800ma
PWR_2 (ADJUST) 800ma
PWR_3 (ADJUST) 800ma
2x2 Conn
32/64-bit DDR3
16xAddr, 3 Bank 32xData, CTRL
2x16 DDR3L X32 bit only
TSEC Port 1
RGMII (EBC ENET0)
PHY
RJ45
SGMII
TSEC Port 2
RGMII (EBC ENET1)
SMB
MDC/MDIO
Interrupt Controller
INTERRUPTs
USB 0
USB D+ / D-
Micro USB CONNECTOR
USB 1
USB D+ / D-
UART 0
UART0
SILABS CP2104
Micro USB CONNECTOR
UART 1
UART1 (EBC UART1)
GPIO
GPIO
User LEDS (2)
eSPI
SPI
eSDHC
microSD CONN
EEPROM
TEMP Sensor
RTC
I2C Port 0
I2C0
I2C Port 1
I2C1
IFC
Integrated Flash Controller 16xAddress/Data[0:15] / 16xAddress[16:31] / Control signals
Debug JTAG / COP
16-Pin JTAG / COP
x16 ADDR Latch
Local Bus 16xAddress
CPLD MISC LOGIC
NOR FLASH 1x16 Up to128MByte
Debug LEDs
Expansion Bus Connector (EBC)