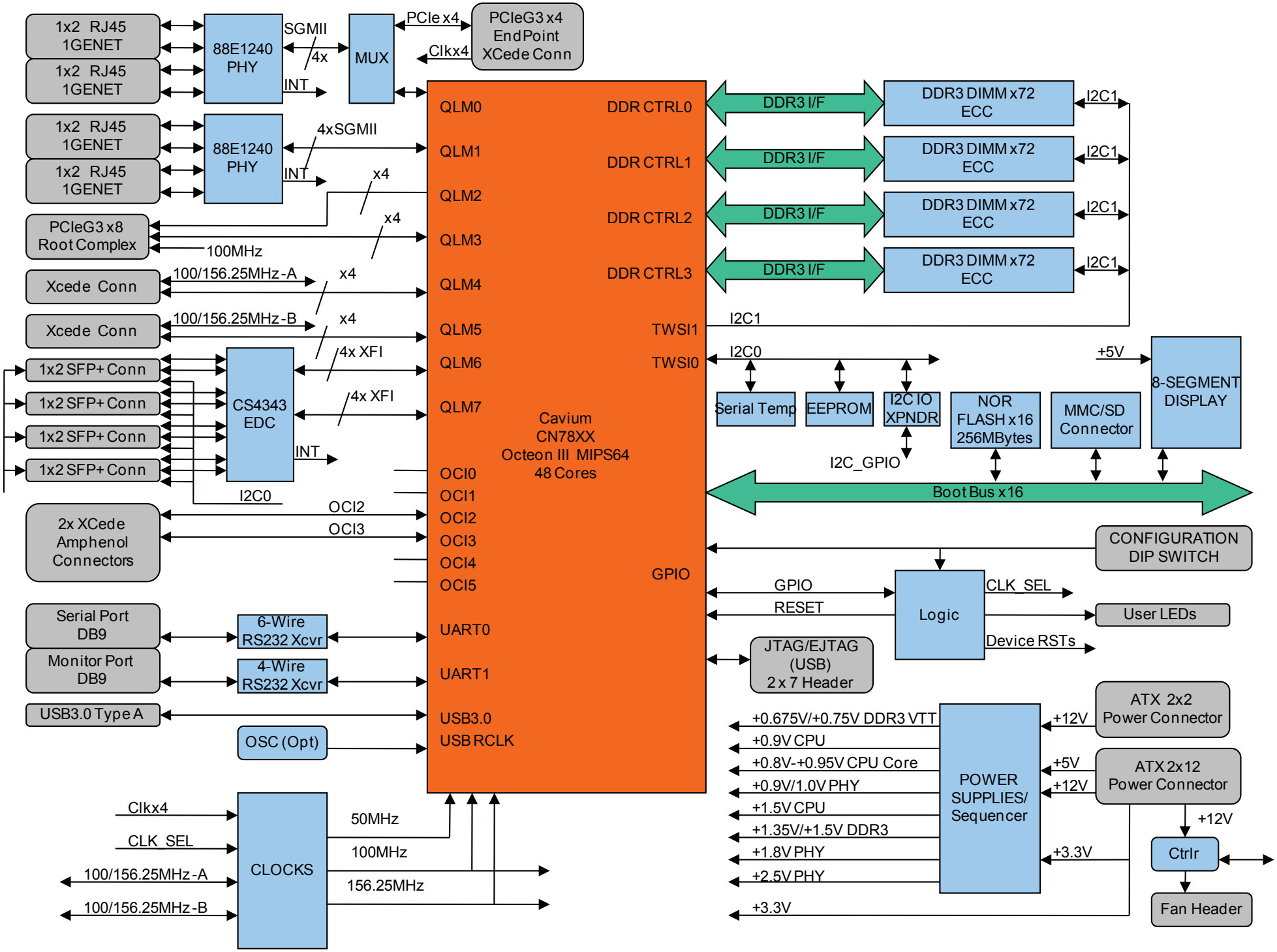
1x2 RJ45 1GENET
1x2 RJ45 1GENET
88E1240 PHY
SGMII
4x
INT
MUX
PCIe x4
Clkx4
PCIeG3 x4 EndPoint XCede Conn
1x2 RJ45 1GENET
1x2 RJ45 1GENET
88E1240 PHY
4xSGMII
INT
x4
PCIeG3 x8 Root Complex
100MHz
x4
Xcede Conn
100/156.25MHz-A
x4
Xcede Conn
100/156.25MHz-B
x4
1x2 SFP+ Conn
1x2 SFP+ Conn
1x2 SFP+ Conn
1x2 SFP+ Conn
CS4343 EDC
4x XFI
4x XFI
INT
I2C0
2x XCede Amphenol Connectors
OCI2
OCI3
Serial Port DB9
6-Wire RS232 Xcvr
Monitor Port DB9
4-Wire RS232 Xcvr
USB3.0 Type A
OSC (Opt)
QLM0
QLM1
QLM2
QLM3
QLM4
QLM5
QLM6
QLM7
OCI0
OCI1
OCI2
OCI3
OCI4
OCI5
UART0
UART1
USB3.0
USB RCLK
Cavium CN78XX Octeon III MIPS64 48 Cores
DDR CTRL0
DDR CTRL1
DDR CTRL2
DDR CTRL3
TWSI1
TWSI0
GPIO
DDR3 I/F
DDR3 I/F
DDR3 I/F
DDR3 I/F
DDR3 DIMM x72 ECC
DDR3 DIMM x72 ECC
DDR3 DIMM x72 ECC
DDR3 DIMM x72 ECC
I2C1
I2C1
I2C1
I2C1
I2C1
I2C0
+5V
Serial Temp
EEPROM
I2C IO XPNDR
NOR FLASH x16 256MBytes
MMC/SD Connector
8-SEGMENT DISPLAY
I2C_GPIO
Boot Bus x16
CONFIGURATION DIP SWITCH
GPIO
RESET
Logic
CLK_SEL
Device RSTs
User LEDs
JTAG/EJTAG (USB) 2 x 7 Header
+0.675V/+0.75V DDR3 VTT
+0.9V CPU
+0.8V-+0.95V CPU Core
+0.9V/1.0V PHY
+1.5V CPU
+1.35V/+1.5V DDR3
+1.8V PHY
+2.5V PHY
+3.3V
POWER SUPPLIES/ Sequencer
+12V
+5V
+12V
+3.3V
ATX 2x2 Power Connector
ATX 2x12 Power Connector
+12V
Ctrlr
Fan Header
Clkx4
CLK_SEL
100/156.25MHz-A
100/156.25MHz-B
CLOCKS
50MHz
100MHz
156.25MHz