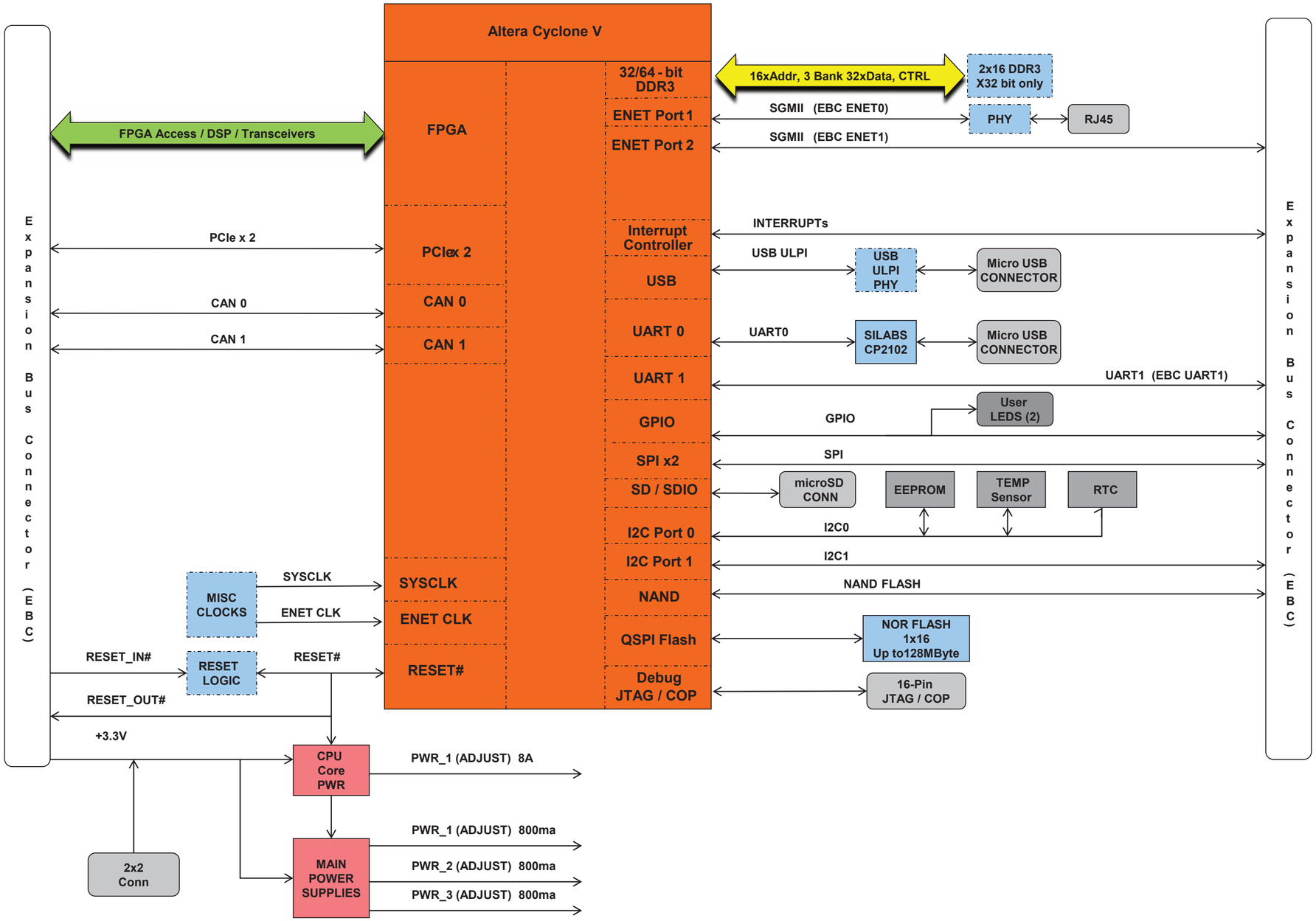
Altera Cyclone V
FPGA
FPGA Access / DSP / Transceivers
PCIex 2
PCIe x 2
CAN 0
CAN 1
SYSCLK
ENET CLK
RESET#
32/64 - bit DDR3
ENET Port 1
ENET Port 2
Interrupt Controller
USB
UART 0
UART 1
GPIO
SPI x2
SD / SDIO
I2C Port 0
I2C Port 1
NAND
QSPI Flash
Debug JTAG / COP
16xAddr, 3 Bank 32xData, CTRL
2x16 DDR3 X32 bit only
SGMII (EBC ENET0)
PHY
RJ45
SGMII (EBC ENET1)
INTERRUPTs
USB ULPI
USB ULPI PHY
Micro USB CONNECTOR
UART0
SILABS CP2102
Micro USB CONNECTOR
UART1 (EBC UART1)
User LEDS (2)
GPIO
SPI
microSD CONN
EEPROM
TEMP Sensor
RTC
I2C0
I2C1
NAND FLASH
NOR FLASH 1x16 Up to128MByte
16-Pin JTAG / COP
Expansion Bus Connector (EBC)
Expansion Bus Connector (EBC)
MISC CLOCKS
SYSCLK
ENET CLK
RESET_IN#
RESET LOGIC
RESET#
RESET_OUT#
+3.3V
CPU Core PWR
PWR_1 (ADJUST) 8A
MAIN POWER SUPPLIES
PWR_1 (ADJUST) 800ma
PWR_2 (ADJUST) 800ma
PWR_3 (ADJUST) 800ma
2x2 Conn