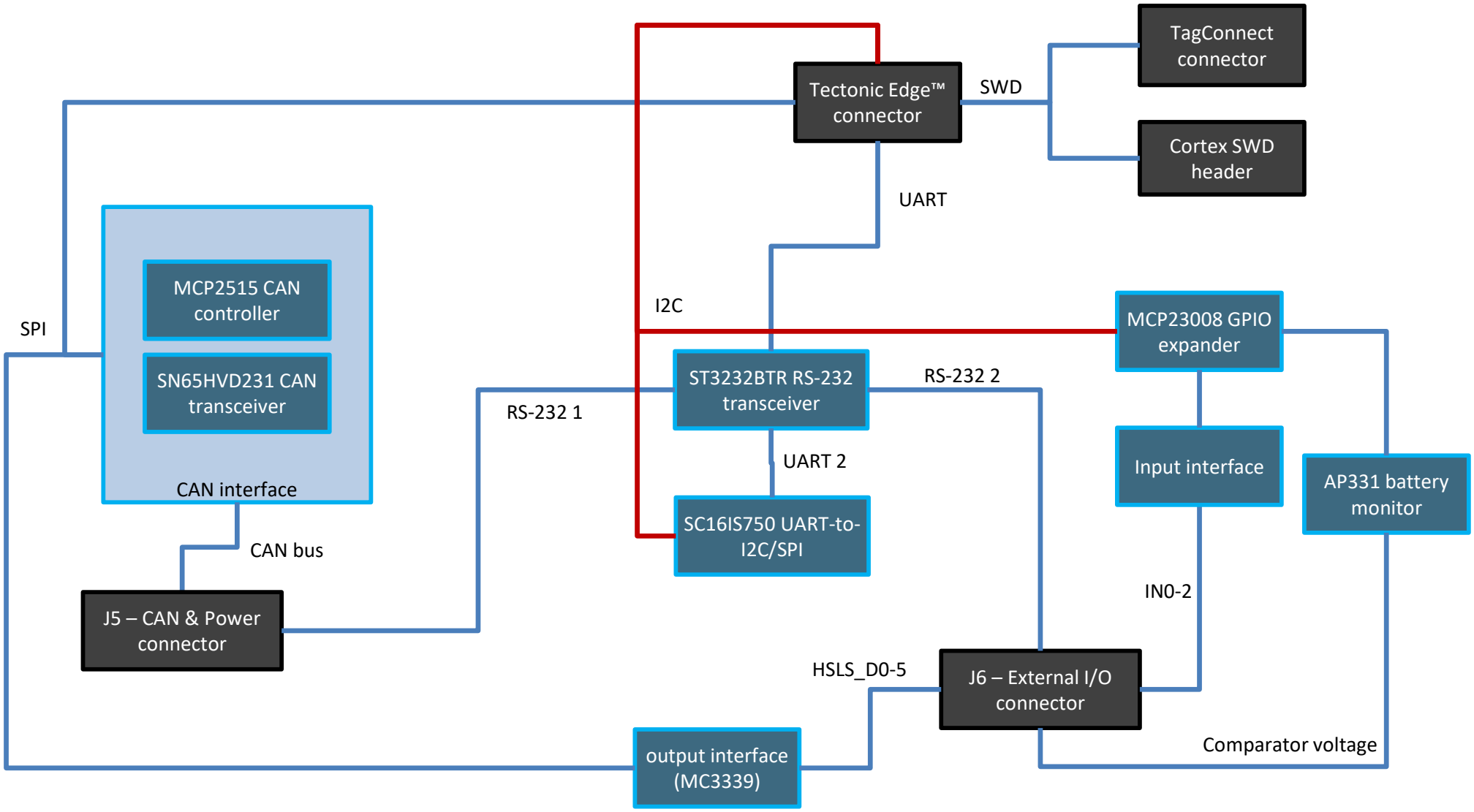

DES0277_12
epConnected Vehicle
Board Block Diagram
V1.0
17 Feb 2022

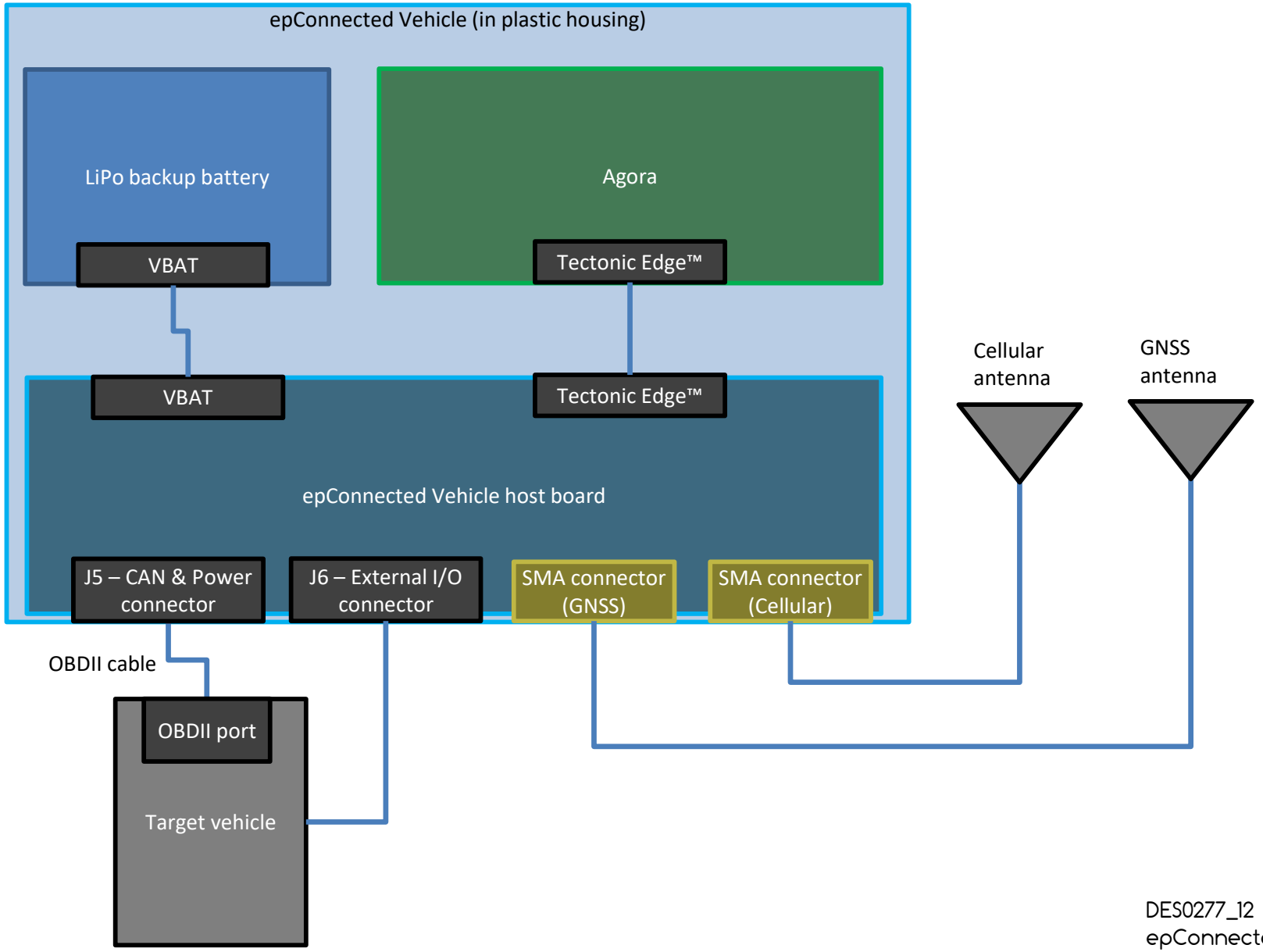

DES0277_12
epConnected Vehicle
System Block Diagram
V1.0
17 Feb 2022

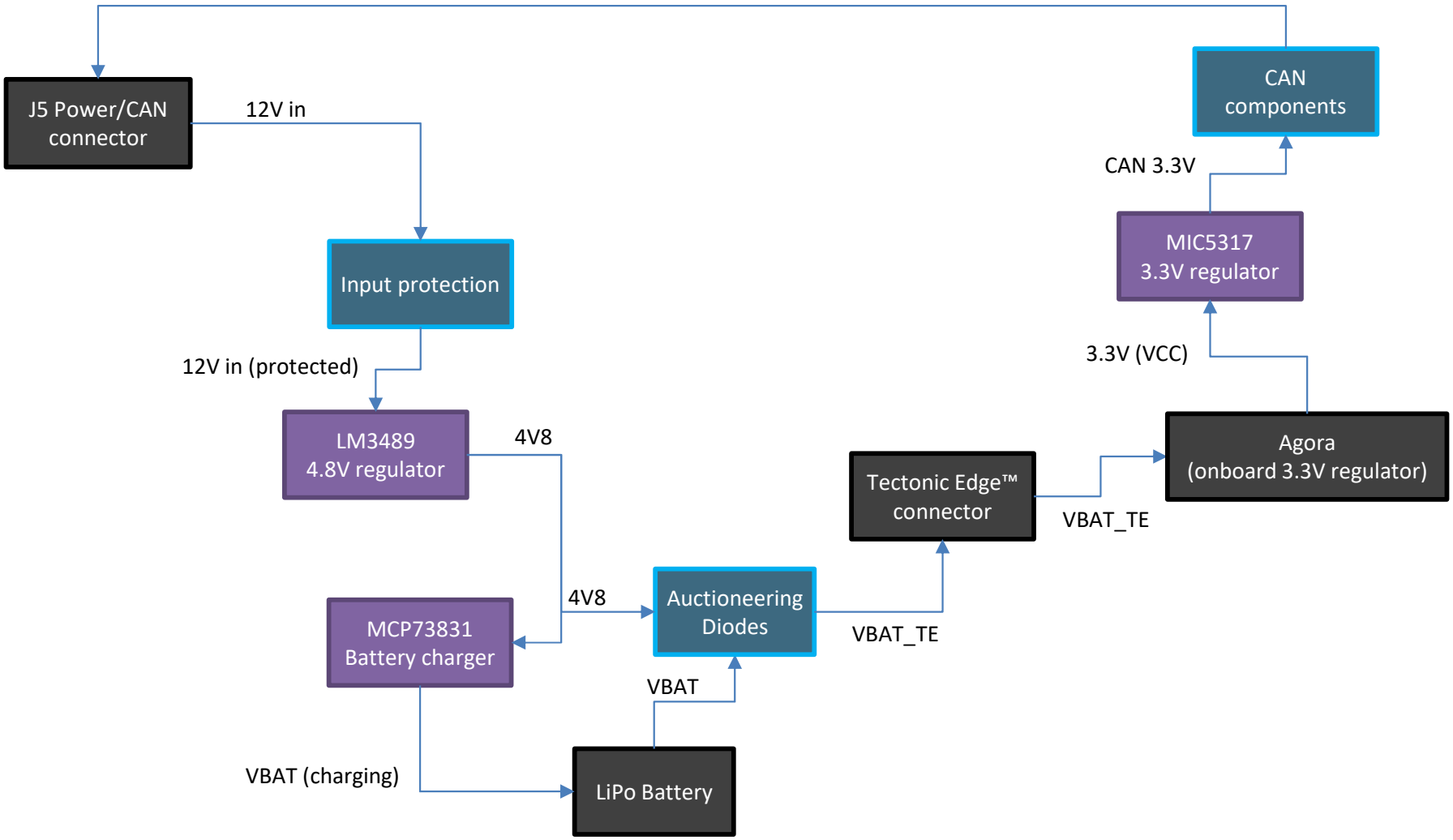

DES0277_12
epConnected Vehicle
Power Block Diagram
V1.0
17 Feb 2022